Tire Multifunction Tester TMT PC/ LT

A combined Spring Rate-/ Load Distribution Tester and Footprint Analysis System

Key facts

- **Tire radial, lateral, longitudinal and torsional stiffness**
- **Loadprint/ Pressure map**
- **Footprint**
- **Loaded contour**
- **Bead unseating**
- **Plunger testing**
- **Pitch cut test**
- **Proven stiff L-shape design**
- **MC, PC, LT, T&B tires**
- **Combined spindle and hydraulic loading**
- **Wheel loads ≤ 50 kN**

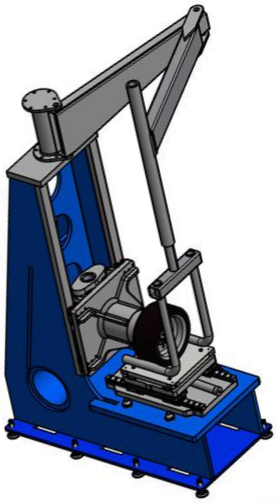

Test Standards

- **ASM F1971**
- **GBT 23663-2009, GBT 4502-2009**
- **SAE J2705, SAE J2704**

Altracon S.A. • 56 Rue de la Gare • L-6440 Echternach
www.altracon.com

Dynamic tire sidewall contour measurement

Lateral stiffness measurement

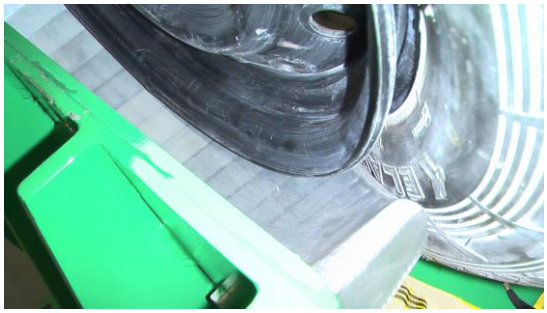

Bead unseating test

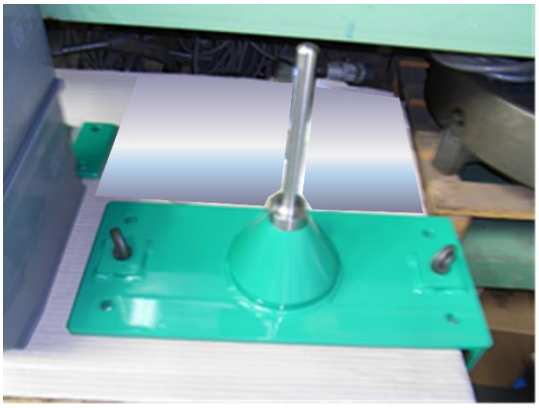

Plunger pin unit

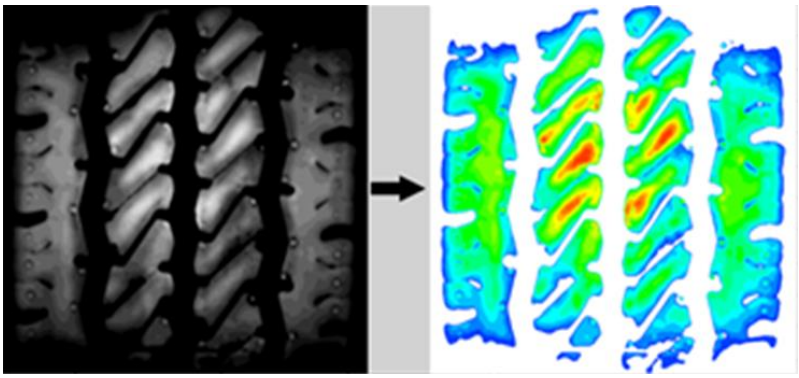

Footprint-/ optical pressure mapping
Foot-/ Loadprint Analysis example graphical report

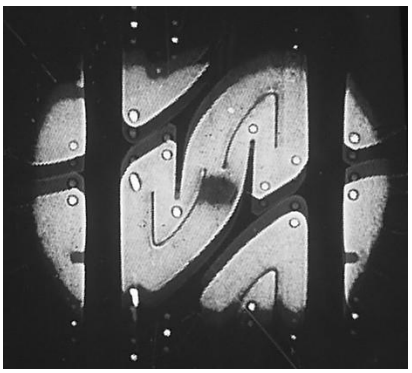

Foot print deflection

TECHNICAL DATA

PARAMETER	SPECIFICATION
	PC/ LT
Tire Diameter Range	≤ 1.000 mm
Max. Section Width	450 mm
Max. Load	≤ 5000 kg
Internal Tire Pressure	0 - 6 bar
Pressure Accuracy	0.25 % of FS
Bead Diameter	≥ 10"
Ambient Temperature	0 - 45° C
Temperature Accuracy	0,1° C
Radial Force	50kN
Load Accuracy	≤ 0.5% set range load Fz (depending on measuring system)
Load plate	500 x 500mm
Ambient Temperature	0 – 45° C
Temperature Accuracy	0,1° C
Force Measurement Fz	50kN
Force Measurement Fx, Fy	20kN *(others on request)*
Force and Moment Measurement accuracies	≤ ± 0,5% set range (depending on measuring system)
Vertical positioning	Z = 700 mm/ ± 0,1 mm (200 … 900 mm)
Vertical (radial) deflection	Z - 250 mm/ ± 0,01 mm
Longitudinal & Lateral Force Fx; Fy	± 1 N max. 20kN
Longitudinal/ lateral deflection	≤ 200 mm/ ± 0,01 mm
Longitudinal/ lateral sliding speed	variable 1 … 100 mm/min
Torsional torque	± 5 kNm
Torsional deflection	≥ ± 15°/ ± 0,1°
Standard supply voltages	400 V (50/ 60 Hz, 3 phase)
Control Voltage	24 V
Camber adjustment (optional)	+/- 10°/ ± 0,1°

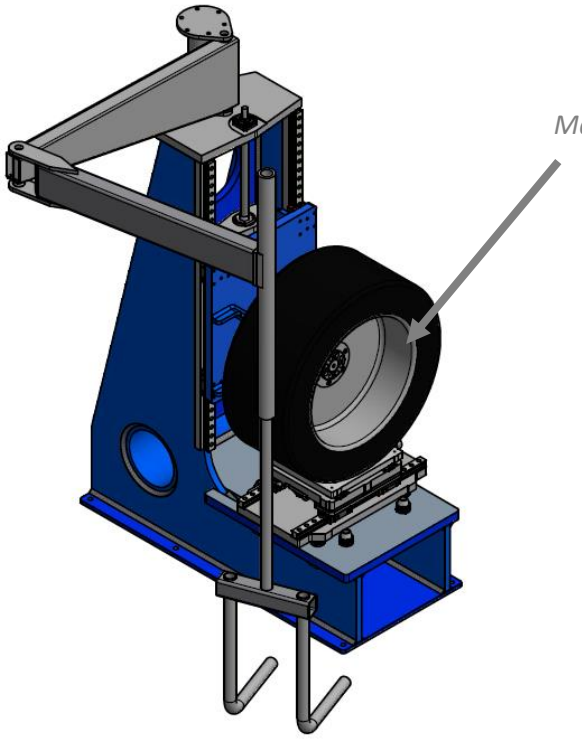

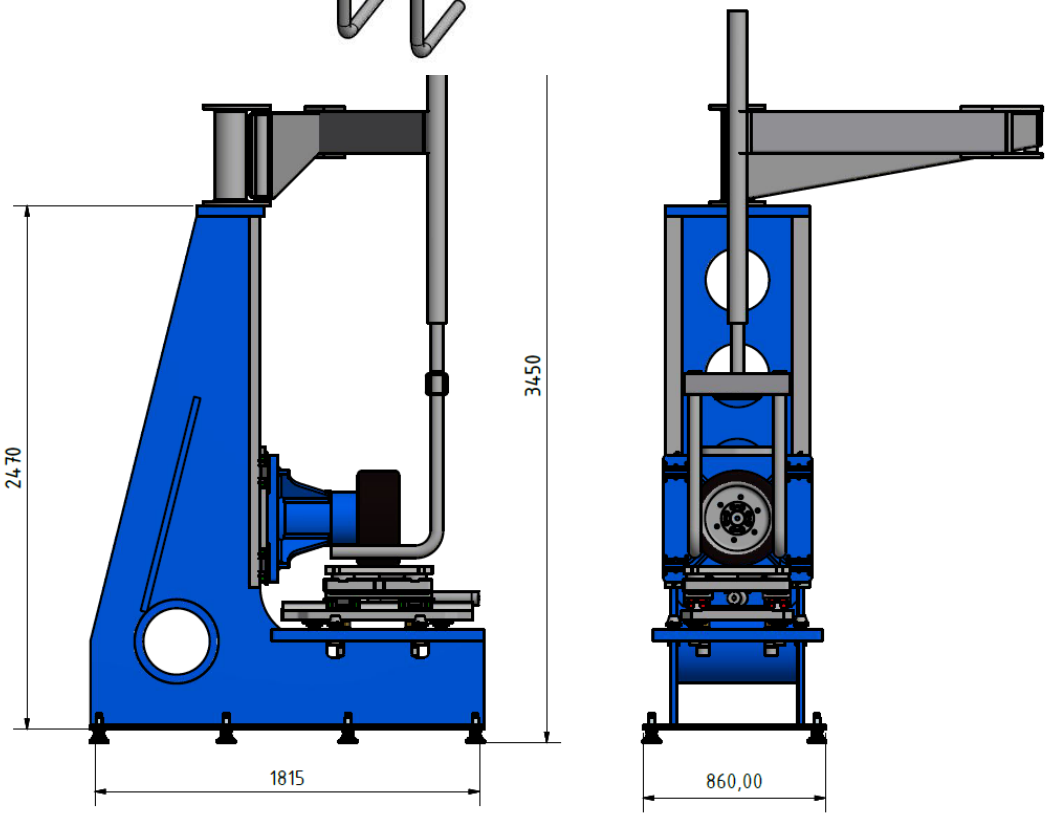

General Layout TMT PC/ LT